Quantum Electronics **51** (4) 333 – 337 (2021)

https://doi.org/10.1070/QEL17471

Indirect drive thermonuclear targets with free-flying fuel capsules

M.L. Shmatov

Abstract. **Indirect drive thermonuclear targets with fuel capsules at the stage of X-ray irradiation in a free flight are proposed. The absence of structural elements fixing the fuel capsule at the beginning of this stage will make the initiation of their associated instabilities impossible and will thereby improve the fuel compression.**

Keywords: *laser fusion, indirect initiation, instabilities.*

1. Introduction

In experiments with indirect drive laser thermonuclear targets performed at the National Ignition Facility (NIF), the presence of structural elements in the composition of the targets that fix the fuel capsules gave rise, in several cases, to the origin of instabilities, which had a significant adverse effect on the symmetry of fuel compression and, as a consequence, on the number of fusion reactions resulting from the compression [1 – 5]. The quantitative parameters describing this effect depend strongly on the compression mode, the method of fixing the fuel capsule, the material and the thickness of the ablator [1 – 5]. Most sensitive to the instabilities under discussion are plastic ablators [4, 5].

In the majority of NIF experiments, the fuel capsule was fixed with a so-called tent, consisting of two thin plastic membranes [1 – 5]. Two types of tents were used, which received the names ‘nominal tent’ and ‘polar tent’ [1 – 5] (Fig. 1). In experiments with plastic ablators and high-entropy compression of deuterium-tritium fuel, the replacement of the nominal tent (experiment N150211, Fig.1a) with a polar tent (experiment N171001, Fig.1b) significantly improved the symmetry and, as a consequence, other compression parameters (the remaining parameters of the targets and the conditions of their irradiation were approximately the same) [5]. The neutron yield Y_{DT} increased from $(8.73 \pm 0.18)\times 10^{15}$ to $(10.69 \pm 0.30)\times 10^{15}$ [5]. Considered as the main reason for the improvement of compression symmetry is a decrease in the areas A_{tent} of the instability growth regions near the boundaries of the regions of contact between the membranes and the ablator [5]. When estimating the dependence of A_{tent} on the tent type, it is assumed that the width of instability development regions is small compared to the perimeters of these boundaries and does not depend on the tent type [5]. According to this approximation, replacing the nominal tent with the polar one reduced the A_{tent} by approximately 4.3 times [5]. Further reduction of A_{tent} is currently impossible due to the limitations imposed by the parameters of the materials in use [5].

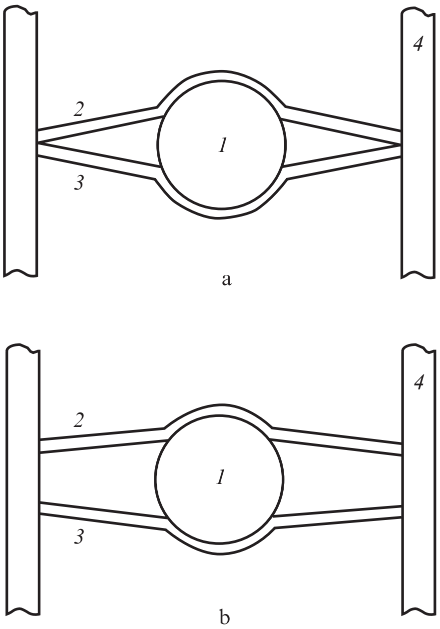

Figure 1. Simplified schemes for fixing the fuel capsule of the indirect drive target with (a) nominal and (b) polar tents:
(*1*) the fuel capsule; (*2*, *3*) plastic membranes; (*4*) part of the hohlraum (the radiation-confining shell).

It is not yet clear whether there will be a significant, accompanied by a noticeable increase in Y_{DT}, improvement in the symmetry of the high-entropy compression of the deuterium-tritium fuel in the capsule with a plastic ablator with a further decrease in A_{tent}, if it turns out to be possible, or with the use of other methods of fixing the fuel capsule [5]. This problem is of scientific interest by itself. In any case, the prevention of the origin or noticeable development of instabilities associated with the fixation of the fuel capsule is necessary for clarifying the fundamental possibility of efficient low-entropy compression (see, for example, Ref. [4]). We emphasise that plastic ablators have certain advantages [4, 6 – 12]. In particular, they make it possible to produce high-quality fuel capsules using diffusion filling [7 – 12]. The productivity and other parameters of this method meet the

M.L. Shmatov Ioffe Institute, Politekhnicheskaya ul. 26,
194021 St. Petersburg, Russia;
e-mail: M.Shmatov@mail.ioffe.ru

Received 4 November 2020; revision received 31 December 2020
Kvantovaya Elektronika **51** (4) 333 – 337 (2021)
Translated by E.N. Ragozin

requirements for the production of targets for thermonuclear power plants [7–12]. The absence of a fuel-filling hole in the ablator will avoid the initiation of its related instabilities (see, for example, Refs [4, 5]).

The initiation of instabilities associated with the fixation of the fuel capsule at the initial stage of its X-ray irradiation will be prevented if such fixation is abandoned, or, in other words, when the capsule is irradiated in the state of free flight. This flight, some implementation versions of which are considered below, will be a small-scale analogue of the flight of a direct drive target in the reactor chamber of a thermonuclear power plant (see, for example, Refs [7, 9–15]). The proposed approach is intended primarily for experiments in the initiation of single microexplosions by laser radiation. The expedience of its implementation in thermonuclear and hybrid power plants, as well as in the initiation of single microexplosions by other methods, calls for special research and is not discussed in this paper.

2. Options for the implementation of the free flight of the fuel capsule

2.1. Basic elements of the simplest targets

The free flight of a fuel capsule is most easily realised when it is injected into a shell that confines X-ray radiation (this shell is usually called a hohlraum), when the injector piston acts directly on the capsule (Fig. 2), or when the capsule is fixed inside such a shell in an initial position that differs from the position during irradiation (Fig. 3). In the latter case, the flight of the fuel capsule can occur under the action of gravity alone as well as under the force of gravity and the momentum purposefully imparted to the capsule. The fixation of the fuel capsule during the installation of such a target and other preliminary actions with it can be carried out, for example, by holders – the structural elements that are quickly pulled out of the hohlraum before target irradiation (see Fig. 3). In some cases, electromagnets can be used to move them, as well as to inject the fuel capsule. The vertical arrangement of the cylindrical hohlraum in Fig. 2 corresponds to NIF experiments [1–5, 16].

The structural elements of the target that prevent or compensate for the leakage of the gas filling the hohlraum (see, for example, Refs [1–5]) are not shown in Figs 2 and 3. The initial pressure of this gas in the target shown in Fig. 2 should take into account its subsequent compression during the injection of the fuel capsule.

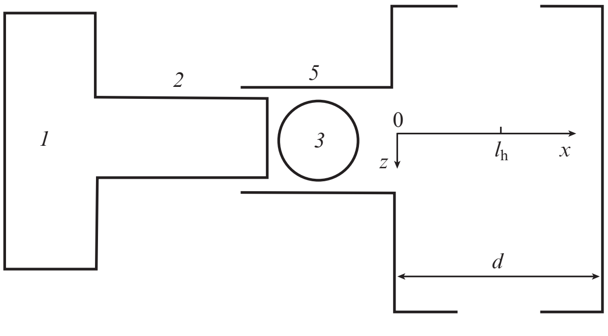

Figure 2. Version of a target with injection of the fuel capsule into a vertically positioned cylindrical hohlraum with direct action of the injector piston on the capsule:
(*1*) injector piston pusher; (*2*) injector piston; (*3*) fuel capsule in the initial position; (*4*) hohlraum; (*5*) injector barrel.

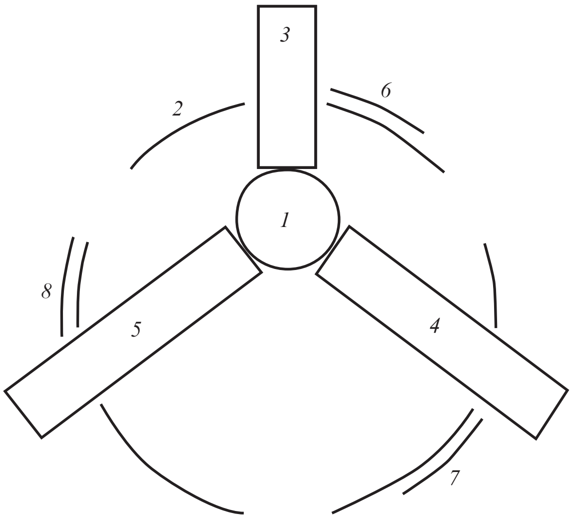

Figure 3. Version of the target with the free fall of the fuel capsule in the hohlraum without imparting it an initial momentum:
(*1*) fuel capsule in the initial position; (*2*) hohlraum; (*3–5*) holders; (*6–8*) shutters (the structural elements providing the motion of holders and shutters are not shown).

The motion of the target injector piston should be organised so that its surface directly acting on the capsule would later serve as an element of the inner surface of the hohlraum. One of the conditions for the implementation of this scenario is that this surface must have a coating, which includes a sufficiently thick layer of a heavy element, for instance gold, or a material consisting of several heavy elements (see, for example, Refs [1–5, 16, 17]; in the version with gold, the minimum thickness of such a layer is 8 μm [17]). To prevent ablator contamination by one or more heavy elements (an example of a possible negative manifestation of such contamination is given in Ref. [5]), it may be necessary to apply, on top of this layer, a thin layer of a material that does not contain heavy elements, such as plastic. Note that Ref. [16] describes hohlraums with a thin (0.4–0.6 μm) inner layer of gold and boron (the boron content is 40% by the number of atoms) deposited on a thicker uranium layer.

In the version shown in Fig. 3, after the fuel capsule is released the holders are completely removed from the hohlraum through the openings, which are subsequently closed with shutters to prevent or reduce the leakage of thermal radiation. Other options are also possible. In particular, the contact surfaces of the holders can serve as elements of the inner surface of the hohlraum. In this case, they must have the coatings mentioned above.

The accuracy of fixing the fuel capsule with a tent in a cylindrical hohlraum is approximately 10 μm [5]. Apparently, the main technical difficulties of the efficient implementation of the approach proposed in our paper are determined by the need to set the position of the fuel capsule at the time of laser irradiation of the target with approximately the same accuracy. This problem is difficult, but solvable, since the length of the trajectory of the fuel capsule in the hohlraum will be short (~1 mm).

2.2. Accuracy of delivery of the fuel capsule injected into a cylindrical, vertically positioned hohlraum

First, we consider the possibility of achieving an accuracy of 10 μm when implementing the method shown in Fig. 2 for coordinates in a plane perpendicular to the initial flight direction of the fuel capsule. We denote the deviation of the fuel capsule centre in this plane from the hohlraum centre by $\Delta_\perp$ and use the data on the accuracy of shooting (hereinafter the term 'accuracy' is used to describe both linear and angular quantities). Previously, almost the same approach was used in Refs [13, 14] – the problems of pneumatic injection of a direct drive target into the chamber of a thermonuclear power plant were analysed using data on the accuracy of pneumatic weapons. In Section 10.3.2 of the book [13], the following is reported: "...present high precision air guns being able to deliver projectiles into an area of radius less than 1 mm at a distance 12 m with a horizontal trajectory." Paper [14] contains a similar statement: "Air rifles have achieved an accuracy of ±0.1 mrad." This figure is compared with an accuracy of ±0.3 mrad, corresponding to the delivery of a thermonuclear target to the centre of the chamber of a thermonuclear power plant at a distance of 17 m with an accuracy of ±5 mm [14]. At the same time, it is noted that air rifle bullets have a higher density and the conditions in its barrel may be unacceptable for a fragile target [14].

In experiments N150211 and N171001, the inner hohlraum diameter d was 5.75 mm [5]. Evidently the planned horizontal displacement l_h (see Fig. 2) of the centre of the fuel capsule in the hohlraum is $d/2$. Parameters $l_\mathrm{h} \approx 3$ mm and $\Delta_\perp \approx 10$ μm correspond to the ratio $\Delta_\perp/l_\mathrm{h} \approx 3.3\times10^{-3} \gg 10^{-4}$. We emphasise, however, that Ref. [14] refers to the accuracy of the rifle. In Ref. [13], the type of the barrel is not specified, but it would be natural to assume that the case in point is a rifled barrel when we are dealing with a precision gun (see also Refs [18, 19]). In experiments with targets similar in design to the target shown in Fig. 2, the fuel capsule may be imparted a stabilising rotation. To this end, the capsule must be placed in a tray connected to the piston by a bearing and be spun up before imparting it acceleration in the linear direction. A similar scenario, namely, the throwing of a prespun disk by the combustion products of a mixture of hydrogen and oxygen, was described in Ref. [20]. Since the piston and the tray are connected, the tray can also be considered as part of the piston. It is taken into account here that the optimal speed of the fuel capsule in the situations under consideration is low (see below), and so rotating the tray using rifling in the injector barrel and protrusions on the tray (see, for example, Ref. [18]) would be inefficient. We emphasise that the rotation stabilises the flight of bullets of various shapes, including those close to spherical [18]. The rotation of the fuel capsule may be of interest for individual experiments with the ultimate accuracy of fuel capsule delivery to the centre of the hohlraum, but it will lead to an additional complication of the target and the experiment as a whole, so in many experiments it will be desirable to do without it. Data on the dispersion of round bullets of smoothbore guns [19] suggest that this is possible.

When firing a round bullet from a smoothbore gun at a distance of 50 m, it is possible to achieve the hit of all bullets in a circle with a diameter of 20–25 cm [19]. The ratio of the radius of this circle to the firing range is approximately (2 – 2.5) × 10^{-3}, which is less than the above value of $\Delta_\perp/l_\mathrm{h} \approx 3.3\times10^{-3}$.

High requirements for the accuracy of manufacturing fuel capsules, which stem from the need to ensure strong compression of the fuel, seem to be a factor contributing to high injection accuracy. Note that Ref. [6] reports the manufacture of spherical plastic shells intended for use as ablators with a sphericity of better than 0.5 μm.

When using the target shown in Fig. 2, the fuel capsule will slide in the injector barrel. The problem of the admissibility of this sliding calls for a special experimental study (see also [12], which refers to the inadmissibility of sliding of direct drive targets on one of the elements of the equipment used in their production to form a layer of deuterium-tritium ice). The assumption used in our paper about its admissibility, i.e. about the possibility of avoiding damage to the ablator surface and unacceptable fuel heating as a result of sliding, is based on the fact that the fuel capsule velocity v_0 at the moment its center enters the cavity, which is subsequently filled with X-ray radiation, will be rather low. For the target shown in Fig. 2, a velocity v_0 of the order of 0.1–1 m s^{-1} is sufficient. This is due to the fact that the minimum value of v_0 is determined primarily by the requirement that the absolute value Δz of the vertical displacement of the fuel capsule during its flight in the hohlraum is small (it is compensated for by the excess of the initial position of the centre of the fuel capsule above the hohlraum centre).

For an initial estimate of the possible values of v_0, we use an approximation that does not take into account the influence of the gas filling the hohlraum [1–5] on the motion of the fuel capsule. According to this approximation, which will be used further,

$$\Delta z = \frac{g}{2}\left(\frac{l_\mathrm{h}}{v_0}\right)^2, \tag{1}$$

where $g \approx 9.81$ m s^{-2} is the acceleration of gravity. It follows from formula (1), for example, that for $l_\mathrm{h} = 3$ mm and $v_0 = 1$ m s^{-1}, $\Delta z \approx 4.4\times10^{-3}$ cm. Taking into account the characteristic lengths of hohlraums, which are several millimeters [1–5, 16], this is quite acceptable. Rewriting formula (1) in the form $v_0 = l_\mathrm{h}\sqrt{g/(2\Delta z)}$ and substituting in this expression the value $\Delta z = 1$ mm, which also seems acceptable, and $l_\mathrm{h} = 3$ mm, we obtain $v_0 \approx 0.21$ m s^{-1}.

The smallness of v_0 leads to the smallness of the characteristic acceleration a of the fuel capsule in the injector barrel with a length l_b of the order of 0.1–1 cm. By way of example we consider the situation where a is constant. The path along which the initially immobile fuel capsule acquires the velocity v_0 is denoted by l_a. This value is less than l_b (for reasons given below), but the target can be designed so that l_a and l_b are comparable. Obviously, in the situation under discussion, $a = v_0^2/(2l_\mathrm{a})$. This formula implies, for example, that

$$a = 100 \text{ m s}^{-2} \approx 10.2g \text{ for } v_0 = 1 \text{ m s}^{-1},\ l_\mathrm{a} = 0.5 \text{ cm},$$

$$a = 50 \text{ m s}^{-2} \approx 5.1g \text{ for } v_0 = 1 \text{ m s}^{-1},\ l_\mathrm{a} = 1 \text{ cm}.$$

Capsules with deuterium-tritium ice, experiments with which are of the greatest interest, will withstand, with the achievable quality of ice, acceleration up to 500g or even 1000g [12].

The excess of l_b over l_a is due to the following. In the case of the target shown in Fig. 2, after the fuel capsule reaches the speed v_0 (here it is assumed that the fuel capsule deceleration in the barrel after the cessation of acceleration is negligible), the piston motion should slow down so that by the time the capsule reaches the centre of the hohlraum, the contact surface of the piston forms the corresponding section of its inner surface. In addition, it is possible that the minimum value of l_b will be determined by the requirements for the accuracy of delivery of the fuel capsule to the centre of the hohlraum: lengthening the barrel increases the accuracy of shooting. In the case of a rotating tray, the minimum value of $l_b - l_a$ will be determined by the deceleration of the tray and the need to close the corresponding hole in the hohlraum with a shutter or diaphragm after the fuel capsule enters it (here, for simplicity, the device for closing the hole is considered part of the injector barrel). A similar requirement for $l_b - l_a$ also arises in the case of inadmissibility of sliding of the fuel capsule in the barrel, which can be avoided if there is a recess in the piston to accommodate the fuel capsule. The capsule must be in the recess during acceleration and come out of it by inertia when the piston decelerates. The hohlraum-facing portion of the piston with a recess is similar to some versions of the sabots for injecting direct drive targets (see, for example, Refs [9, 12, 14]). The choice of the optimal parameters of the recess, in particular, the decision on the admissibility of using of a deep recess with a portion equivalent to a short barrel (see Refs [9, 12]), calls for a special study, which seems impractical to carry out prior to the solution of the question of admissibility of using the option shown in Fig. 2. Note that when using rotating trays or pistons with recesses, the length of the free flight trajectory of the fuel capsule in the horizontal direction will exceed the radius of the hohlraum.

For the x coordinate directed along the axis of the injector barrel (see Fig. 2), the accuracy of positioning the fuel capsule during target irradiation will be determined by the timing of the irradiation with the flight of the capsule. Next, the parameter x describes the position of the centre of the fuel capsule; $x = 0$ corresponds to the point of its entry into the cavity, which is subsequently filled with X-ray radiation. The change in x during the irradiation of the target is negligible (see, for example, Refs [1–5]). We denote the absolute value of the deviation of x from $d/2$ at the instant of the beginning of target irradiation by $\Delta_{||}$, the time interval between the moment when $x = 0$ and the beginning of target irradiation by t_i, and the planned value of t_i by t_{ip}. We describe the desynchronisation of the beginning of target irradiation with the flight of the fuel capsule with the parameters Δv_0 and Δt_i – the absolute value of the deviation of v_0 from the planned value and the absolute value of the deviation of t_i from t_{ip}, respectively. The requirements for Δv_0 and Δt_i are estimated from the condition

$$\Delta v_0 t_{ip} + v_0 \Delta t_i \leqslant \Delta_{||} = 10\ \mu\text{m}. \tag{2}$$

This condition does not take into account the possibility of partial mutual compensation of the errors related to speed and time. Assuming that each term on the left side of condition (2) must not exceed $\Delta_{||}/2$ and considering that $t_{ip} \approx d/(2v_0)$, we obtain the conditions $d\Delta v_0/v_0 \leqslant 10\ \mu$m and $v_0\Delta t_i \leqslant 5\ \mu$m. In particular, for $d \approx 6$ mm and $v_0 \approx 1$ m/s they take on the form: $\Delta v_0/v_0 \leqslant 1.7\times10^{-3}$ and $\Delta t_i \leqslant 5\times10^{-6}$ s.

Apparently, the greatest difficulties with the fulfillment of the above conditions will arise in attempts to implement microexplosion initiation scenarios with the use of strong magnetic fields produced by electric pulses (see, for example, Refs [4, 17]). This assumption is based on the fact that during such attempts the injector may be exposed to pulsed magnetic fields that obstruct or even prevent achieving high accuracy of its performance.

2.3. Precision of delivery of the fuel capsule in its fall in the hohlraum

Ensuring that the fuel capsule is delivered to the centre of the hohlraum with a high accuracy when it falls in the hohlraum without giving it an initial momentum seems to be the simplest task. By way of example, we assume that during the time before the onset of target irradiation the fall causes the fuel capsule to move by 1 mm. This displacement is compatible with the parameters of several types of hohlraums, in particular spherical ones (see, for example, Fig. 3 and Refs [21–23]). It is easy to show that the velocity of the fuel capsule under irradiation will be approximately 0.14 m s^{-1}. Therefore, the discussed 10-micron accuracy of positioning the fuel capsule in the vertical coordinate will be provided by synchronising the beginning of target irradiation with the beginning of the capsule fall with an accuracy of 7.1×10^{-5} s. It should be noted, however, that the problem of the accuracy of fuel capsule positioning in the horizontal plane passing through the centre of the hohlraum invites special investigation. This problem intersects with the problem of the accuracy of injection of the fuel capsule in the vertical direction, in particular, when the capsule is free-falling without imparting it an initial momentum (see also Fig. 10.14 in Ref. [13] and Ref. [15]).

In the situation under consideration, the fall time of the fuel capsule will be approximately 1.4×10^{-2} s. Thus, holders and shutters moving over distances ranging from 1 mm to 3 cm (it seems unlikely that the characteristic displacements will be outside of this range) should move at an average speed of 0.07 – 2.1 m s^{-1}.

3. Conclusions

The implementation of the proposed approach will lead to a significant complication and the resultant increase in the cost of targets. An additional complication and increase in the cost of the experiment as a whole will be associated with the need to prevent damage to the equipment by high-speed solid fragments and droplets arising from injectors, holders and other structural elements (see, for example, [24–26]). Nevertheless, in present-day conditions, this implementation seems quite justified. In particular, it will make it possible, in combination with other methods of improving fuel compression, to determine the maximum achievable parameters of indirect drive targets with plastic ablators and low-entropy fuel compression.

Acknowledgements. The author expresses his appreciation to the reviewers for their helpful comments on the original version of the article.

References

1. Nagel S.R., Haan S.W., Rygg J.R., et al. *Phys. Plasmas*, **22**, 022704 (2015).
2. Tommasini R., Field J.E., Hammel B.A., et al. *Phys. Plasmas*, **22**, 056315 (2015).
3. Smalyuk V.A., Robey H.F., Alday C.L., et al. *Phys. Plasmas,* **25**, 072707 (2018).
4. Laser Indirect Drive input to NNSA 2020 Report LLNL-TR-810573 (May 20, 2020).

5. Ralph J.E., Döppner T., Hinkel D.E., et al. *Phys. Plasmas*, **27**, 102708 (2020).
6. Letts S.A., Fearon E.M., Buckley S.R., Saculla M.D., Allison L.M., Cook R. *Fusion Technol.*, **28**, 1797 (1995).
7. Petzoldt R.W., Goodin D.T., Nikroo A., et al. *Nucl. Fusion*, **42**, 1351 (2002).
8. Aleksandrova I.V., Belolipetskii A.A., Koresheva E.R., Koshelev E.L., Osipov I.E., Safonov A.I., Timasheva T.P., Shcherbakov V.I. *VANT. Ser. Termoyadernyi Sintez*, (4), 22 (2011).
9. Koresheva E.R., Aleksandrova I.V., Ivanenko O.M., et al. *J. Russ. Laser Res.*, **35** (2), 151 (2014).
10. Aleksandrova I.V., Koresheva E.R., Krokhin O.N., Osipov I.E. *VANT. Ser. Termoyadernyi Sintez*, **38** (1), 57 (2015).
11. Aleksandrova I.V., Koresheva E.R., Koshelev E.L., Krokhin O.N., Nikitenko A.I., Osipov I.E. *VANT. Ser. Termoyadernyi Sintez*, 39 (1), 30 (2016).
12. Aleksandrova I., Koshelev E., Koresheva E. *Appl. Sci.*, **10**, 686 (2020).
13. Duderstadt J.J., Moses G.A. *Inertial Confinement Fusion* (New York: Wiley, 1982; Moscow: Energoatomizdat, 1984).
14. Goodin D.T., Alexander N.B., Gibson C.R., Nobile A., Petzoldt R.W., Siegel N.P., Thompson L. *Nucl. Fusion*, **41**, 527 (2001).
15. Mori Y., Nishimura Y., Ishii K., et al. *Fusion Sci. Technol.*, **75**, 36 (2019).
16. Haan S.W., Callahan D.A., Edwards M.T., et al. *Fusion Sci. Technol.*, **55**, 227 (2009).
17. Moody J.D., Johnson A., Javedani J., et al. *Phys. Plasmas*, **27**, 112711 (2020).
18. Fedorov V. *Evolyutsiya strelkovogo oruzhiya* (Evolution of Small Arms) (Moscow: Voenizdat, 1938) Part I.
19. Trofimov V.N. *Okhotnich'i Boepripasy. Spravochnik* (Hunting Ammunition. Guide) (Moscow: Izd. Ruchen'kina; Minsk: Sovremennoe Slovo, 1997).
20. Kryukov P.V. *Intern. J. Impact. Eng.*, **23**, 501 (1999).
21. Phillion D.W., Pollaine S.M. *Phys. Plasmas*, **1**, 2963 (1994).
22. Farmer W.A., Tabak M., Hammer J.H., Amendt P.A., Hinkel D.E. *Phys. Plasmas*, **26**, 032701 (2019).
23. Yan J., Chen Y., Jiang Sh., et al. *Phys. Plasmas*, **27**, 032702 (2020).
24. Tobin M., Eder D., Braun D., MacGowan B. *Fusion Eng. Des.*, **60**, 85 (2002).
25. Eder D., Koniges A.E., Landen O.L., Masters N.D., Fisher A.C., Jones O.S., Suratwala T.J., Suter L.J. *J. Phys.: Conf. Ser.*, **112**, 032023 (2008).
26. Martinkova M., Kalal M., Shmatov M.L. *EPJ Web Conf.*, **59**, 08011 (2013).